NOTE: *ESTIMATED DIMENSIONS. MEASUREMENTS DEPEND ON CHASSIS, TIRES, SPRINGS, AND LOADING.

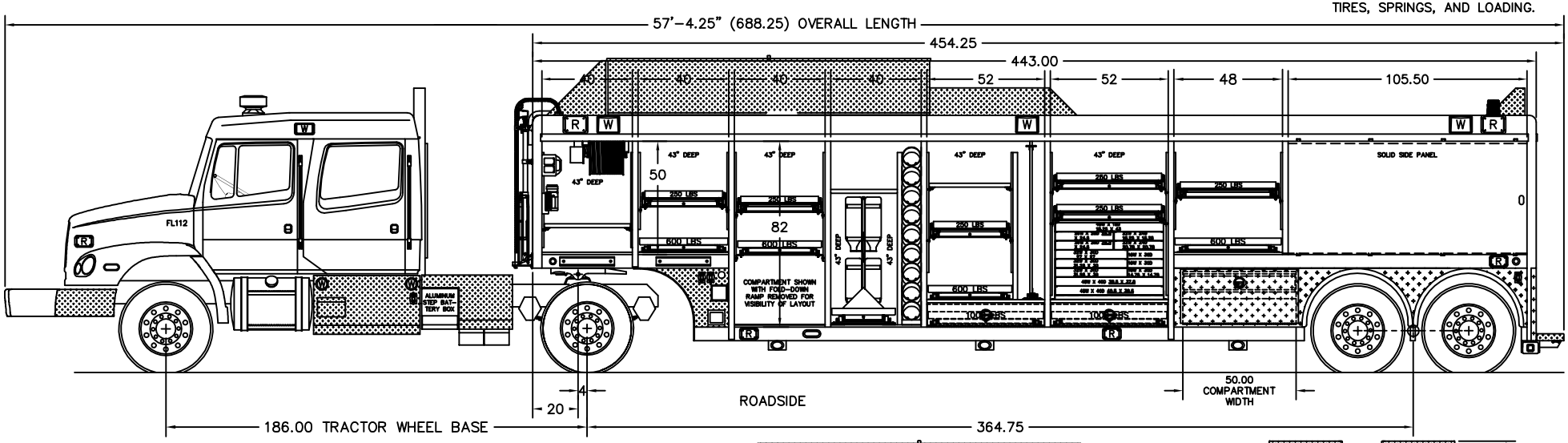

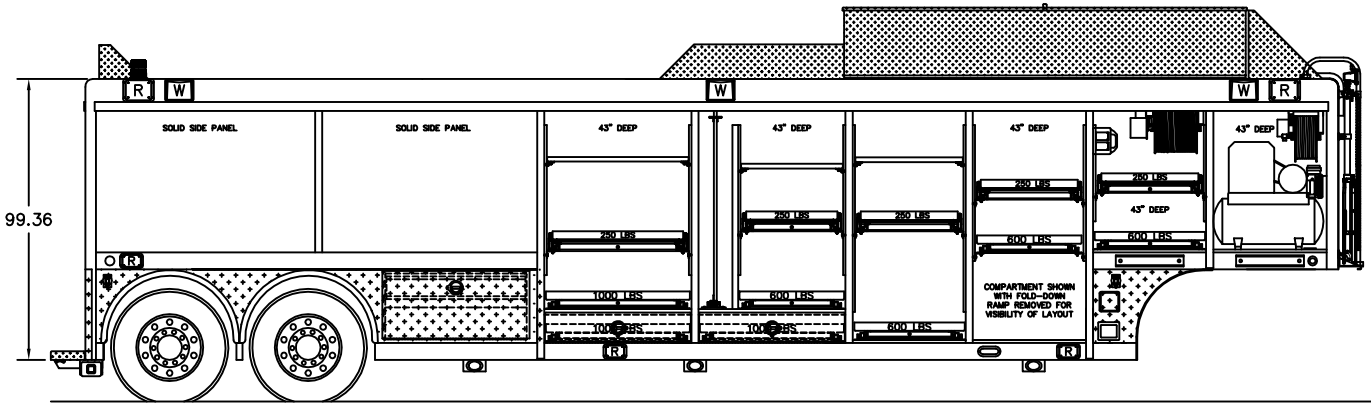

CURBSIDE

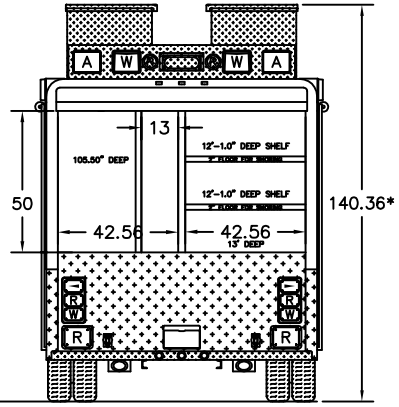

REAR VIEW

THIS PRINT AND ALL RIGHTS TO THE DESIGN AND DETAIL THEREON ARE THE PROPERTY OF HACKNEY, WASHINGTON, N.C. AND IS LOANED TO THE RECIPIENT SUBJECT TO RETURN UPON DEMAND. ITS CONTENTS ARE CONFIDENTIAL AND MUST NOT BE COPIED OR SUBMITTED TO OUTSIDE PARTIES FOR USE OR EXAMINATION.

© 2004 HACKNEY
A Division of SVC

CUSTOM DESIGNED FOR:

DOTHAN
FIRE RESCUE
DOTHAN, AL

DATE	SYM	REVISION RECORD	AUTH	DRFT
10-26-04	A	REVISED PER APPROVED ORDER	TLB	TLB

UNLESS OTHERWISE SPECIFIED
DIMENSIONS ARE IN INCHES
TOLERANCES ON:
2 PL. DECIMALS ±
3 PL. DECIMALS ±
ANGLES ±
FRACTIONS ±

DRAWN BY AND DATE 03-08-04
APPROVED BY DATE

Hackney EMERGENCY VEHICLES

EMERGENCY VEHICLES DIVISION
WASHINGTON, NC 27889-0880

3-EST-14 82/50 RTX

MODEL: TR1582 DOTHAN, AL

SUPERSEDES SUPERSEDED BY SCALE 1=34 D-04C-153 A

PDF created with FinePrint pdfFactory trial version http://www.fineprint.com