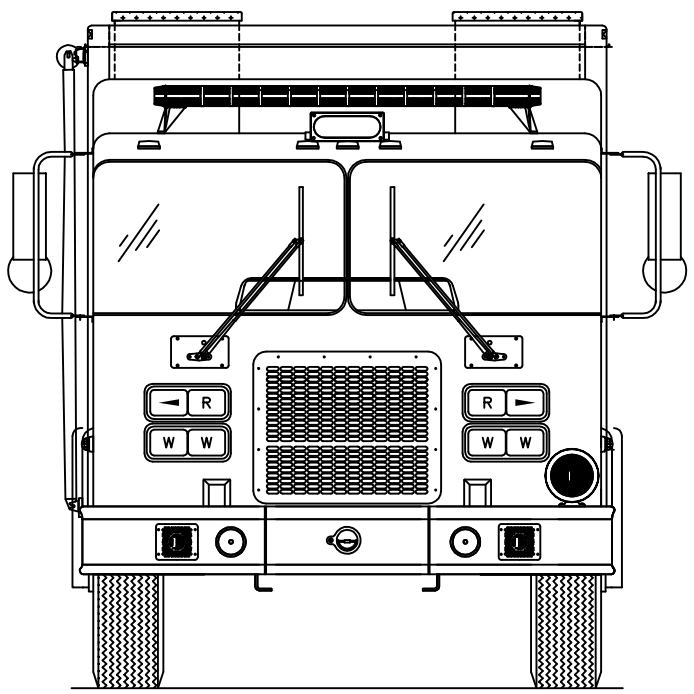

FRONT VIEW

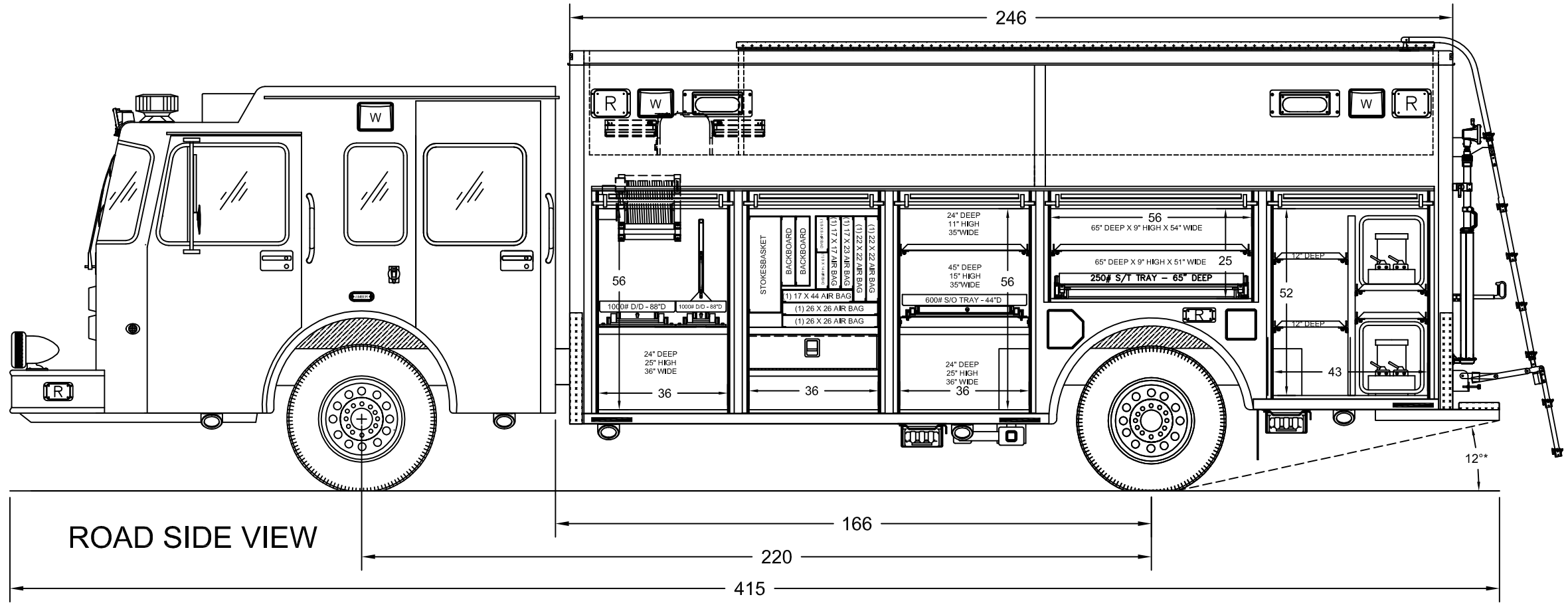

ROAD SIDE VIEW

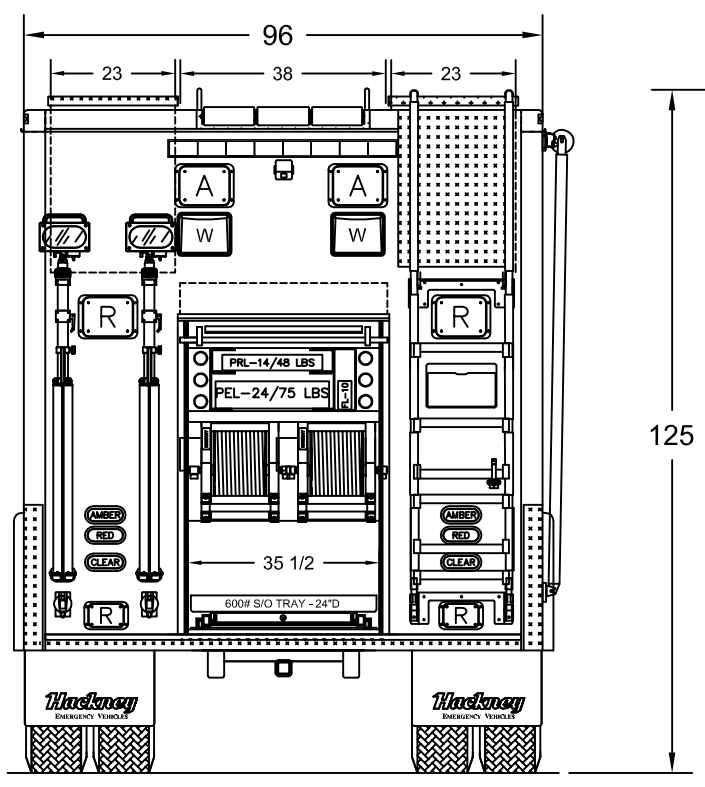

REAR VIEW

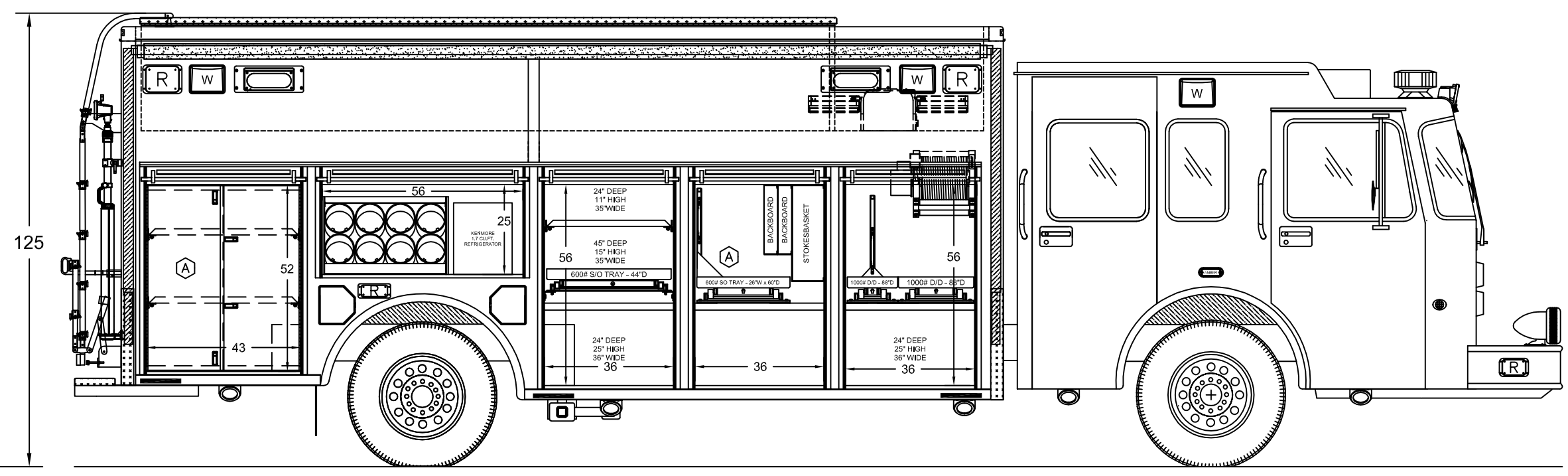

CURB SIDE VIEW

300 CUBIC FT OF EXTERIOR STORAGE

145 CUBIC FT OF ROOF STORAGE

06–17–08	A	REV PER ORDER SUPPLEMENT #3219		AND
DATE	SYM	REVISION RECORD	AUTH	DRFT.

THIS PRINT AND ALL RIGHTS TO THE DESIGN AND DETAIL THEREON ARE THE PROPERTY OF HACKNEY, WASHINGTON, N.C. AND IS LOANED TO THE RECIPIENT SUBJECT TO RETURN UPON DEMAND. ITS CONTENTS ARE CONFIDENTIAL AND MUST NOT BE COPIED OR SUBMITTED TO OUTSIDE PARTIES FOR USE OR EXAMINATION.

NOTE: ESTIMATED DIMENSIONS. MEASUREMENTS DEPEND ON CHASSIS, TIRES, SPRINGS, AND LOADING.

Hackney EMERGENCY VEHICLES

© 2006 HACKNEY

A Division of SVC

EMERGENCY VEHICLES DIVISION

WASHINGTON, NC 27889-0880

DRAWN BY	DATE	CUSTOM DESIGN FOR:		
EES	11/05/07	WAKE COUNTY GOVERNMENT		
SHEET 1 OF 1		STONY HILL FIRE DEPT.		
MODEL: BID 07-047		SCALE 35	DRAWING NO. D-07C-368	REV. A